ClimaCheck
Concom

User Manual

2017-12-05

Safety Precautions

Read the instruction manuals for all relevant equipment carefully before starting to use ClimaCheck Performance Analysing systems.

If equipment is used in a way not specified by producer the protection and safety provided may be impaired.

For activities related to electrical systems, pressurised systems as well as systems charged with refrigerants certifications/licenses are required in most countries.
ClimaCheck products are only intended for use by competent technicians/engineers with on each market required certifications/licenses.

Any work with electricity, pressurised systems and refrigerant involve potential dangers to human health and system integrity if not conducted with caution. In many cases the value of products or cost of production loss represents great values. ClimaCheck do not assume any responsibility for injuries or costs occurring if failures are caused in connection with measurements. It is the user that must evaluate if an installation can be carried out without risks to cause injuries and/or damage. Installation should only be carried out when it can be done with proper safety margins.

TABLE OF CONTENTS

1 Power supply

The Concom unit can be supplied with 8-36VDC for installations directly on DIN-rails. The standard package with housing also includes a 230VAC to 24VDC power supply, see electrical drawing in Section 10.

2 Overview

On the front of the Concom unit a display, 8 buttons and 4 LEDs can be found. The unit has a built-in modem and is supplied with a SIM card ready to be activated. Contact ClimaCheck support to activate this card or for instructions to use your own card.

For step by step installation instructions see section 8

Figure 1 Front view of ClimaCheck Concom

2.1 LED indicators

The A LED indicates the status on contact with ClimaCheck online server.

A LED	Status
900ms On, 900ms Off (Green)	Connection with Climacheck Online OK (Normal operation)
Fast blinking (Red)	Concom unsuccessful to send data to Climacheck Online server
(Yellow)	-

The B LED indicates Modbus and 1 wire communication status

B LED	Status
900ms On, 900ms Off (Green)	All configured Modbus and 1-Wire units OK and no Alarms active (Normal operation)
0.400ms On, 0.400ms Off (Red)	Modbus communication error
Continuous On, Off (Red)	1-Wire communication error
On (Red)	Alarms active in the Easycool controller, see alarm page on Climacheck Online
(Yellow)	-

The S1 LED indicates the status on the Concom program.

	S1 LED	Status
	500ms On, 500ms Off (Green)	Internal Concom application running OK (Normal operation)
	Fast blinking (Green)	The unit has been forced into recovery mode with the use of the system switch. The application is not executing.
	Fastest blinking (Green)	The unit is initializing, preparing to start the application.
	1500ms On, 500ms Off (Green)	The unit is executing the application program, while charging the internal back-up battery.
	75ms On / 925ms Off (Green)	Execution speed is different from full-speed.
	Fast blinking, (Red)	A runtime error has been detected in the program, contact Climacheck support
	Alternating Fast/Slow (Red)	The unit has lost its firmware, contact Climacheck support
	(Yellow)	-

The S2 LED indicates the modem status.
Communication status is showed as an icon in the display and with the S2 LED, see table below.

	S2 LED	Status	Icon in display
	Off	The GSM module is turned off	
	600 ms On / 600 ms Off (Yellow)	No SIM card inserted or no PIN code entered, or network search in progress, or ongoing user authentication, or network logon in progress.	
	Single 75 ms On / 3 s Off (Yellow)	Logged to the network. No call in progress.	
	Double 75 ms On /3 s Off (Yellow)	A GPRS session is active (bars indicate signal strength)	
	Flashing (Yellow)	Indicates GPRS data transfer.	

3 Display and keys

On the front of the Concom unit, a user interface is found. This includes a 144x32 easy-to-read graphical LCD for showing information to the user with both text and graphics fully supported. The LCD also has icons for battery level/charging-in-progress and GSM network status. Eight push-buttons are available for the user to interact with on the Concom.

The menu structure is shown in the figure below. To open a sub menu press the SEL button, to choose a function or confirm a configuration OK button is used. To go back press ESC.

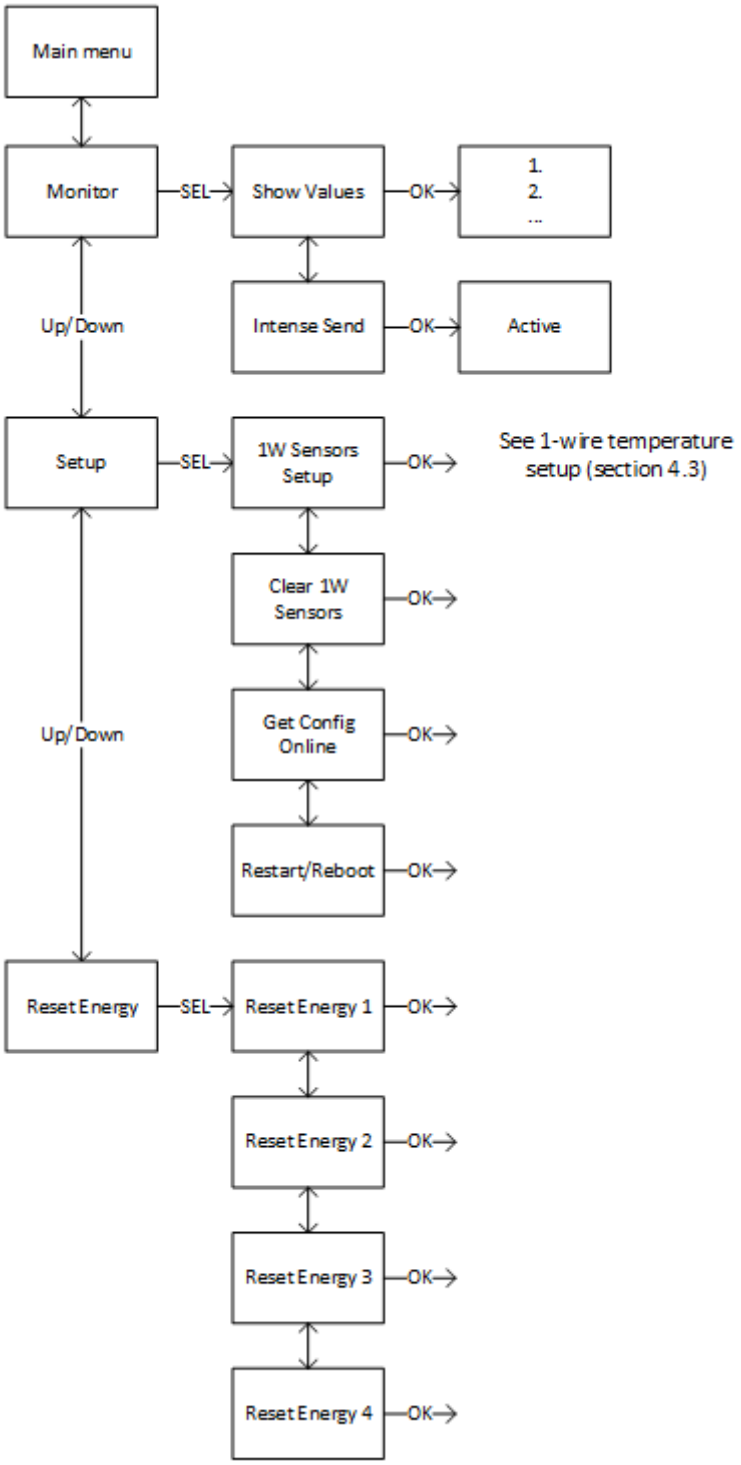

Figure 2 Menu structure

4 Monitor

All values from 1-Wire sensors and EazyCool controller can be seen under the Monitor menu. From the Monitor menu the send interval can also, temporarily, be changed.

4.1 View all values

To view all values

- Press ESC to enter the Main menu
- Press Down until "Monitor" is showed in the display
- Press SEL to enter Monitor menu
- "Show values" appears in the display
- Press OK

Values are showed with a sensor/value number and Comment/Description on the first row and the sensor reading and unit on the second row. Press Up/Down to step through the list of values.

In section 8 tables with all values can be found.

4.2 Send interval / Intense send

Data is sent to the Climacheck server ones every minute when the compressor is on and every 5 minute when the compressor is off. To activate "intense send" and send data every 15 second

- Press ESC to enter the Main menu
- Press Down until "Monitor" is showed in the display
- Press SEL to enter Monitor menu
- Press down until "Intense send" is showed in the display
- Press OK
- "Intense Send Active" appears

Intense send is automatically swished off after 15 minutes.

4.3 Signal level

GPRS signal level can be seen in the display of the unit as bars ,see section 2.1. To view the value in dBm

- Press ESC to enter the Main menu
- Press Down until "Monitor" is showed in the display
- Press SEL to enter Monitor menu
- Press Down until "Signal level GPRS" is showed in the display
- Press OK
- "Level abs = x dBm" is showed

For reliable data transmission a signal strength above 2 "bars" (-80dBm) is required.

5 Temperature sensors

Most of the required temperature readings needed for the ClimaCheck analysis are read from the control unit. For cold room, heating system, chilled water and extra temperatures on the unit/refrigerant circuit, 1-Wire sensors are used. The 1-Wire sensors are connected to the terminal marked Data and GND in the supplied housing or on connector 6 and 7 on the ClimaCheck Concom when installed directly on DIN-rail.

5.1 1-Wire temperature sensors

Although 1-Wire temperature sensors are bus sensors and the measured values are not affected by the resistance in the cable between the master (Concom) and the slave (sensor), there are some limitations on how to wire these sensors. The preferred topology can be seen in the figure below.

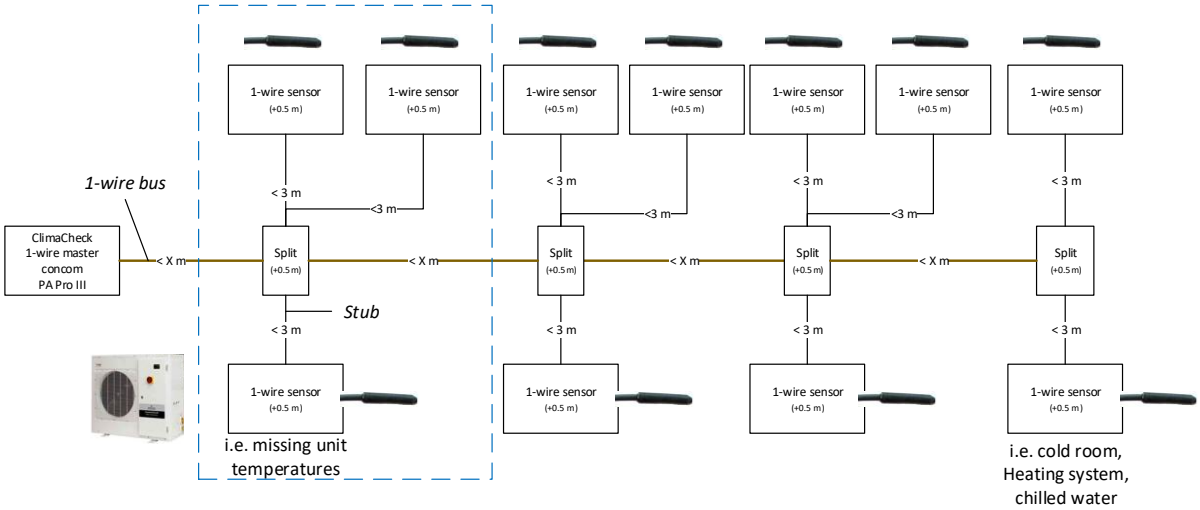

Figure 3 1-Wire preferred topology

The Concom is connected at one end of the 1-Wire bus and each sensor is connected to the bus with branches or "stubs" where each stub is less than 3m. The Concom can handle a total of 16 sensors and a total "weight" of 65 m. The weight is the length of all cables + 0.5m per sensor + 0.5m per split.

Weight = total cable length + 0.5*sensor + 0.5*split
*Example: 3 sensors on 2 meter stubs that is located 5 meters from the Concom with 1 split has a total weight of 0.5*3+(2*3+5)+0.5*1=14.*

Do not run signal wires in parallel with power cables.

5.2 Mounting temperature sensors

Temperature sensors may be mounted on the outside of piping with the ClimaCheck method due to the inherent low sensitivity to temperature errors. This is a critical advantage compared to traditional methods but should not be taken as an excuse to not follow the recommended procedures below. See installation instructions for your system on placement of sensors. In general, temperature sensors should be mounted:

- 10-20 cm from the compressor, flanges, valves or other objects that can change the surface temperature compared to the inner temperature of the tube.
- Maximum contact and insulation should be ensured by:
  - Removal of any insulation and paint on the tube.
  - Heat transfer paste should always be used for surface mounted sensors.
- Aluminium tape should always be used for surface mounting.
- Insulation should be carefully done and diffusion tight if the surface/object is cold.
- Secure the insulation with electrical tape.

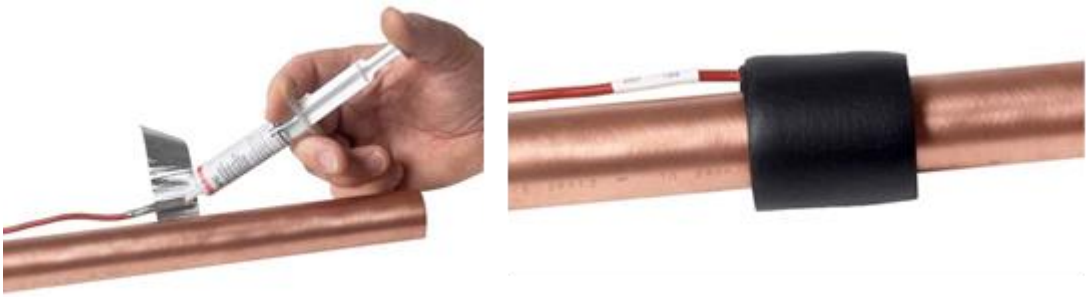

Figure 4 Apply sensors with heat transfer compound, Aluminium tape, and insulation,

5.3 1-Wire temperature sensor setup

The 1-Wire sensor has a unique ID to identify it on the 1-Wire bus and each sensor needs to be configured/connected in the Concom. The number of sensors depends on the type of system and how many extra cold room/heating system/chilled water sensors are installed. Check Section 8 for more details.

Note, 2 sensors are included in the Concom package and are already connected as 1W_01 and 1W_02.

5.3.1 Connecting sensors

The sensors need to be connected and configured **one at a time.** Use the following sequence to setup and connect the sensors:

- Press ESC to enter the Main menu
- Press Down until "Setup" is showed in the display
- Press SEL to enter setup menu
- "1W Sensor Setup" appears in the display
- Press OK to start setup

If this is the first setup "T1 Sensor not conf" appears in the display, if sensors are already configured these will be listed.

- With the up and down arrows go to the position you want to save a sensor to
- Press SEL
- "TX New=xxxxxx OK" is showed in the display (Were TX is the position and xxxxxx is the id number of the sensor)
- Confirm with OK, "S-RID Saved" appears for 2 seconds
- Temperature reading and ID is appearing in the display "TX=XX.X ID=xxxxxx"
- Press up/down to continue with the next sensor or ESC 4 times to go back to the main menu.

If "No new s-r found" appears while setting up a new sensor the Concom cannot find any sensor on the bus that is not already configured, check connection and make sure the sensor has not been connected already.

5.3.2 Replace a 1-Wire sensor

To replace a sensor

- first disconnect old sensor
- Press ESC to enter the Main menu
- Press Down until "Setup" is showed in the display
- Press SEL to enter setup menu
- "1W Sensor Setup" appears in the display
- Press OK
- select the sensor number in the list, it will say "Sensor missing".

- Connect new sensor and press SEL,
- "Tx NEW=xxxxxx OK" is showed in the display
- Confirm with OK, "S-RID Saved" appears for 2 seconds
- Temperature reading and ID is appearing in the display "TX=XX.X ID=xxxxxx"
- Press ESC 4 times to go back to the main menu.

5.3.3 Clear all 1-Wire sensors

To clear all configured 1-Wire sensors

- Press ESC to enter the Main menu
- Press Down until "Setup" is showed in the display
- Press SEL to enter setup menu
- Press down until "Clear 1W Sensors" is showed in the display
- Press OK
- "Clearing.." appears and then your back in the setup menu

This will clear all sensor including preconfigured sensors (1W_01 and 1W_o2). You can now connect the sensors again, see section 5.3.1.

5.3.4 Trouble shoot 1-Wire sensors

- ***"No tempsensors or conn. Wrong. OK?"*** *is showed while configuring sensors.*

  Check wiring and make sure all sensors are connected properly (Data, GND). If the wires from one (1) sensor is mixed up the whole 1-Wire bus stops.

- ***"No new s-r found"*** *is showed when trying to connect/configure sensor.*

  Check wiring and make sure sensor is not already connected/configured on a different position.

- *Sensors has been connected/configured on the wrong position*

  Clear all configured sensors and connect them again, see section 5.3.3

6 Reboot and Reload Configuration

All configuration of the Climacheck Concom unit, except 1-Wire sensors and APN for SIM card, is done on the Climacheck Online server. Any changes to Modbus addresses or external units such as energy meters or IO modules is done on the Climacheck Online server and is then downloaded to the unit. By default the Concom unit contacts the server every 6 hour to check for commands to Reload configuration from the server or Restart.

The Concom unit can also be restarted or forced to reload configuration from the Setup menu.

6.1 Reload configuration

- Press ESC to enter the Main menu
- Press Down until "Setup" is showed in the display
- Press SEL to enter setup menu
- Press Down until "Get Config Online" is showed in the display
- Press OK to load configuration from CC Online server
- "Waite for config, Loading.." appears in the display

After a few seconds, when the configuration has been updated, the Concom will go back to the initial view.

6.2 Reboot

- Press ESC to enter the Main menu
- Press Down until "Setup" is showed in the display
- Press SEL to enter setup menu
- Press Down until "Restart/Reboot" is showed in the display
- Press OK

The unit will reboot.

7 Reset Energy values

The Climacheck Concom calculates the energy use for up to 4 different Eazycool units. These can be reset to 0 from the setup menu.

- Press ESC to enter the Main menu
- Press Down until "Reset Energy" is showed in the display
- Press SEL to enter menu
- Press Up/Down to select which energy value to reset
- "Reset Energy X" appears in the display
- Press OK to confirm

8 Installation

The ClimaCheck Concom unit helps gather the data to analyse the refrigeration unit. Some data are read from the controller and some from additional 1-Wire temperature sensors.

The connection between Concom and the control unit is done with a 3-lead cable. As default the Concom will read values from Modbus address 1. If more than one unit is connected to the same Concom each controller needs to be setup with a unique address.

Follow the steps below in order to install the Concom unit and start sending data to ClimaCheck online.

A. Mount housing with the Concom unit
B. Connect power supply but don't switch on power yet, see Section 10
C. Connect Modbus communication cable between Concom and controller, see Figure 2 and Section 10.
D. Start the Concom unit and check the Modbus communication and internet/modem communication (Section 2.1).
E. Install the required 1-Wire sensors with heat transfer paste, aluminium tape and insulation, see section 5.2 and the below sections depending on the specific unit.
F. Connect and configure the required 1-Wire sensors **one at a time**. Check Section 5 for installation/configuration instructions and the below sections depending on the specific unit.

   Note, 2 sensors are included in the Concom package and are already connected as 1W_01 and 1W_02.

G. Contact ClimaCheck support and have the following ready:

   - Eazy cool model number (ZXxx-xxxx-xxx-xxx)
   - Serial number (identification number), printed on the Concom unit and displayed at startup. (6XXXXX)
   - Complete 1-wire sensor list with sensor number and description including all extra sensors.

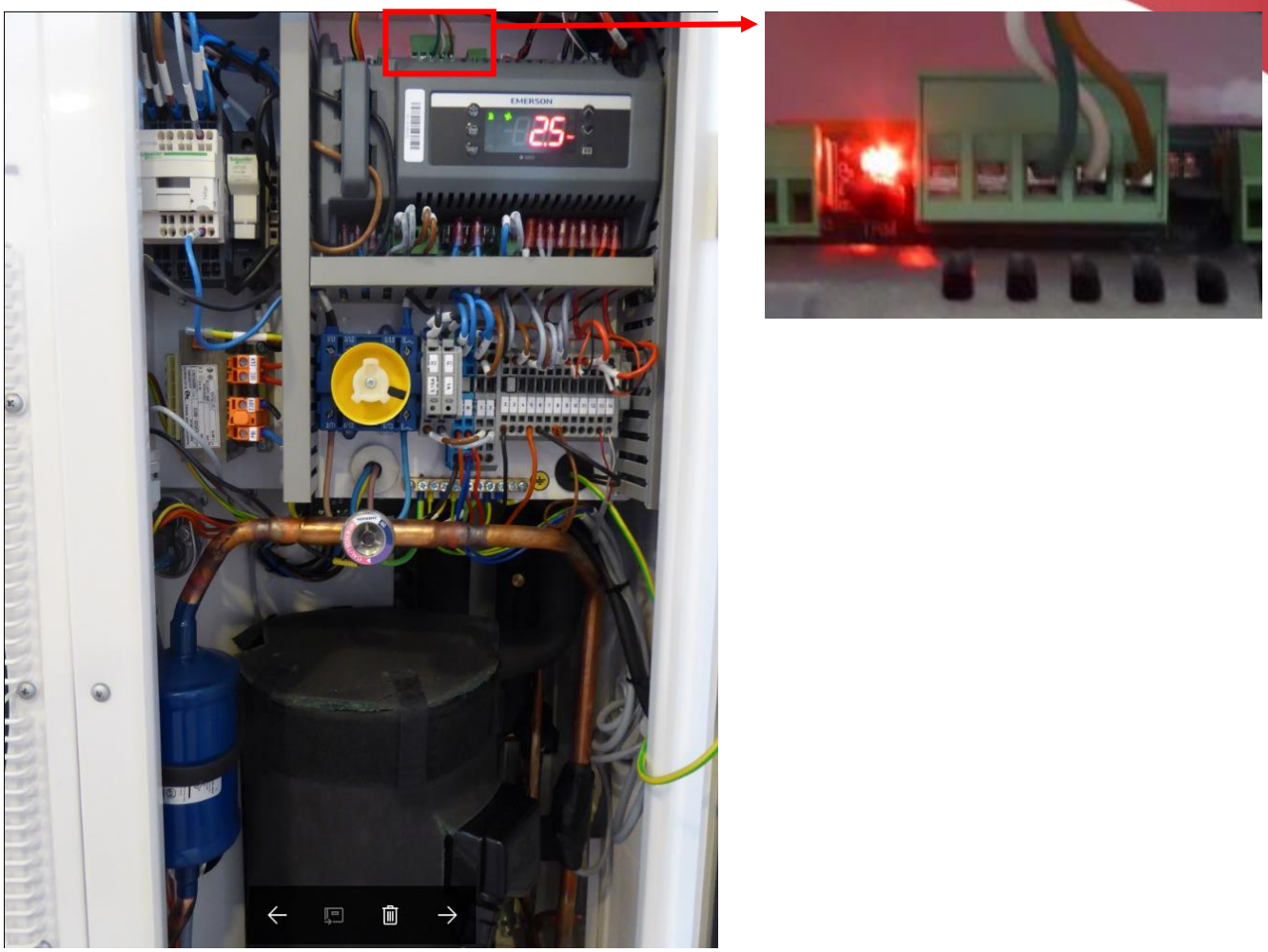

Figure 2 EazyCool Modbus connection on the top left side

8.1 ZXME

Values that are read from the controller (black) and values taken with 1-Wire sensors (blue) can be seen in the flowchart and table below. Sensor 1W_01 and 1W_02 is already configured in the Concom. Additional 1-Wire sensors needs to be configured.

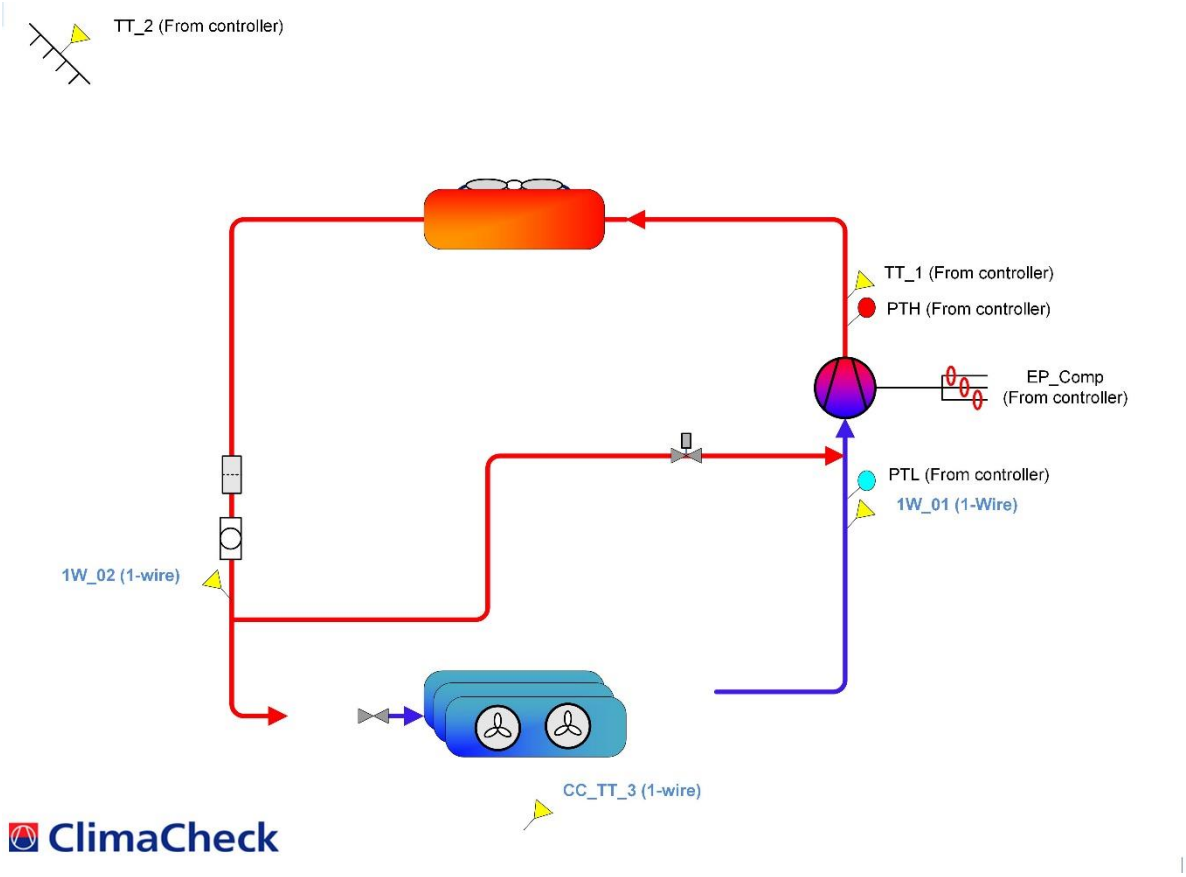

Figure 3 ZXME flowchart

Table 1, Eazy Cool ZXME values including 1-Wire sensors

	Sensor in flowchart	Description	Type	Eazycool name
1	PTH	High Pressure	Eazycool	P2 / PTH
2	PTL	Low Pressure	Eazycool	P1 / PTL
3	TT_1	Discharge temperature	Eazycool	P3 / TT1
4	TT_2	Ambient temperature	Eazycool	P6 / TT2
5	-	n/a	Eazycool	P4 / TT3
6	-	n/a	Eazycool	P5 / TT4
7	-	Not used	Eazycool	P7
8	-	Current measurement 1	Eazycool	Current sensing 1
9	-	Current measurement 2	Eazycool	Current sensing 2
10	-	Voltage L1	Eazycool	Voltage sensing 1
11	-	Voltage L2	Eazycool	Voltage sensing 2
12	-	Voltage L3	Eazycool	Voltage sensing 3
13	EP_Comp	Electrical power input compressor	From voltage and current	-
14	-	Electrical energy compressor	From voltage and current	-
15	1W_01	Suction	1-wire sensor	-
16	1W_02	Liquid line	1-wire sensor	-
17	1W_03	Indoor/cold room sensor	1-wire sensor	-
18	-	Not used		-

8.2 ZXLE

Values that are read from the controller (black) and values taken with 1-Wire sensors (blue) can be seen in the flowchart and table below. Sensor 1W_01 and 1W_02 is already configured in the Concom. Additional 1-Wire sensors needs to be configured.

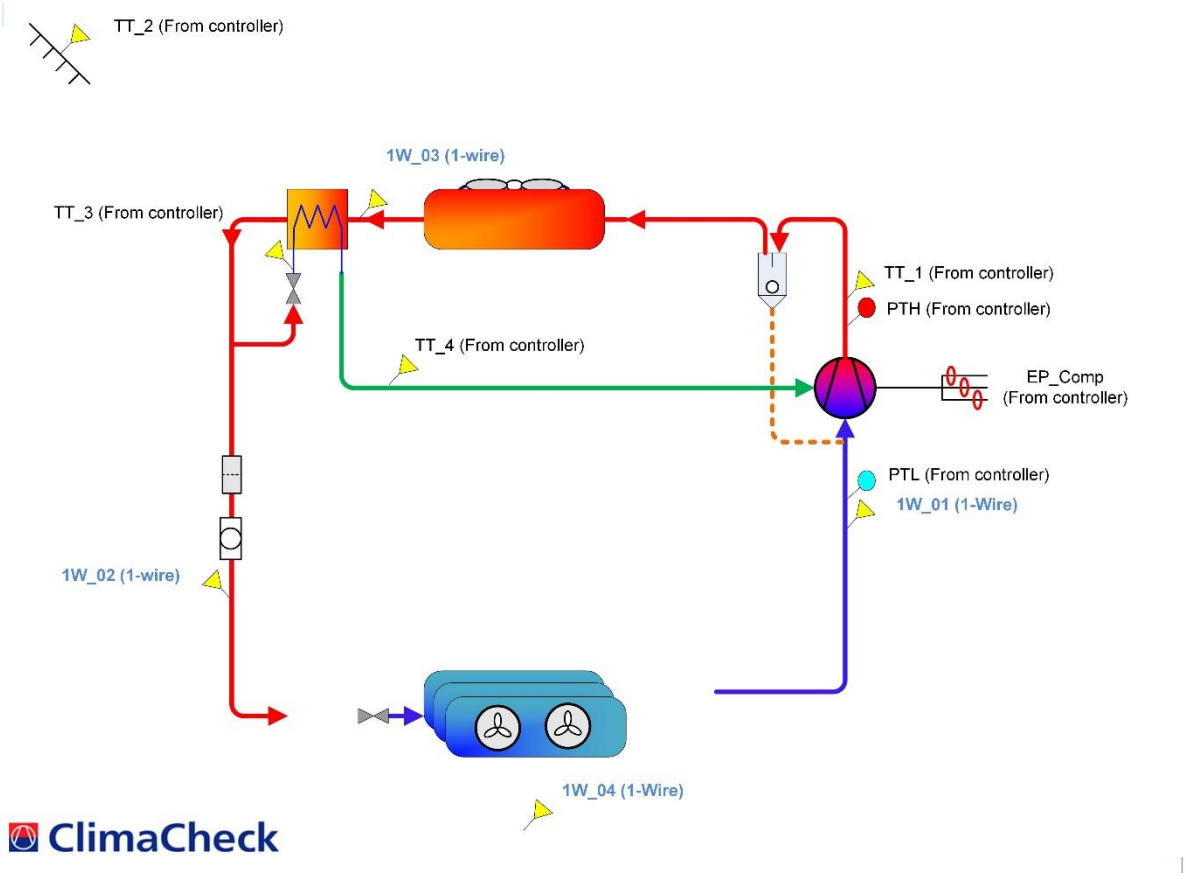

Figure 4 ZXLE flowchart

Table 2, Eazy Cool ZXLE values including 1-Wire sensors

	Sensor in flowchart	Description	Type	Eazycool name
1	PTH	High Pressure	Eazycool	P2 / PTH
2	PTL	Low Pressure	Eazycool	P1 / PTL
3	TT_1	Discharge temperature	Eazycool	P3 / TT1
4	TT_2	Ambient temperature	Eazycool	P6 / TT2
5	TT_3	Vapor economizer in	Eazycool	P4 / TT3
6	TT_4	Vapor economizer out	Eazycool	P5 / TT4
7	-	Not used	Eazycool	P7
8	-	Current measurement 1	Eazycool	Current sensing 1
9	-	Current measurement 2	Eazycool	Current sensing 2
10	-	Voltage L1	Eazycool	Voltage sensing 1
11	-	Voltage L2	Eazycool	Voltage sensing 2
12	-	Voltage L3	Eazycool	Voltage sensing 3
13	EP_Comp	Electrical power input compressor	From voltage and current	-
14	-	Electrical energy compressor	From voltage and current	-
15	1W_01	Suction	1-wire sensor	-
16	1W_02	Liquid line	1-wire sensor	-
17	1W_03	Liquid line after condenser	1-wire sensor	-
18	1W_04	Indoor/cold room sensor	1-wire sensor	-

8.3 ZXDE

Values that are read from the controller (black) and values taken with 1-Wire sensors (blue) can be seen in the flowchart and table below. Sensor 1W_01 and 1W_02 is already configured in the Concom. Additional 1-Wire sensors needs to be configured.

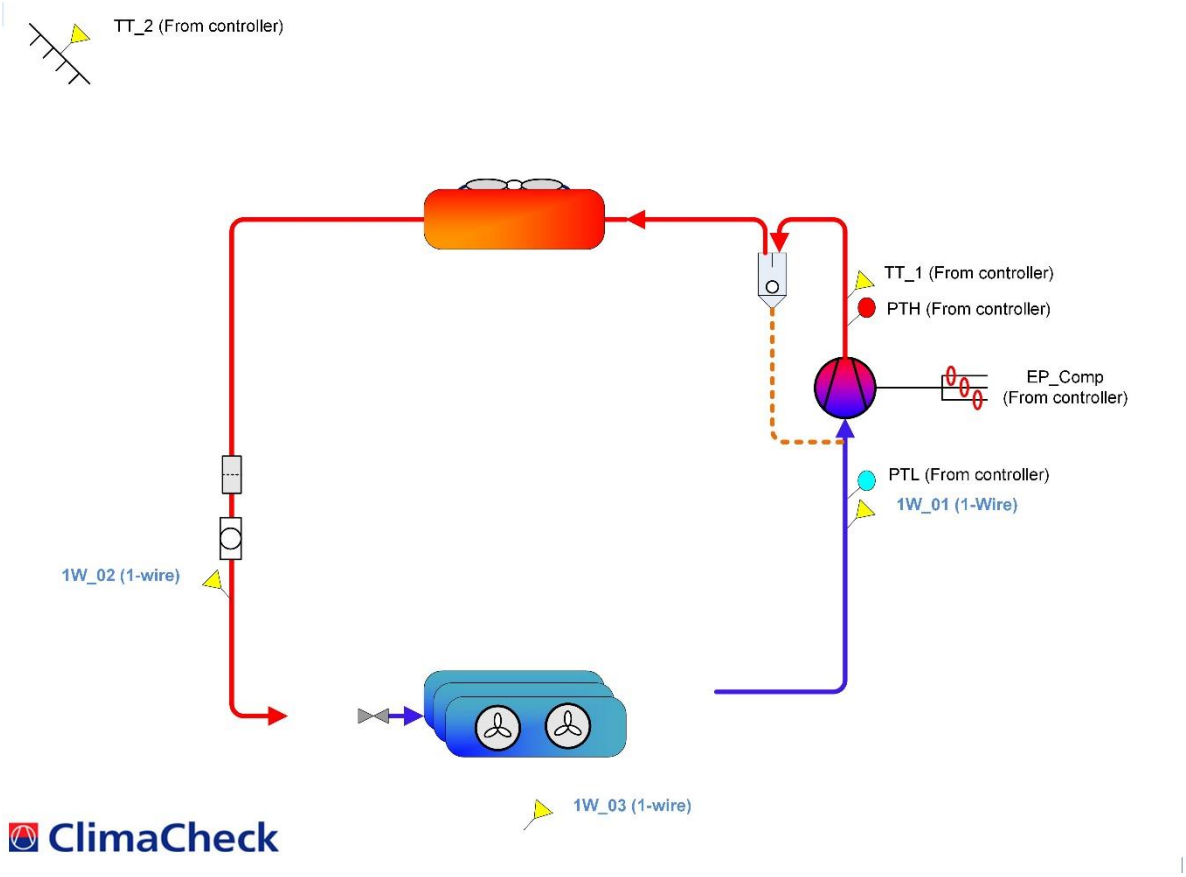

Figure 5 ZXDE flowchart

Table 3, Eazy Cool ZXDE values including 1-Wire sensors

	Sensor in flowchart	Description	Type	Eazycool name
1	PTH	High Pressure	Eazycool	P2 / PTH
2	PTL	Low Pressure	Eazycool	P1 / PTL
3	TT_1	Discharge temperature	Eazycool	P3 / TT1
4	TT_2	Ambient temperature	Eazycool	P6 / TT2
5	-	n/a	Eazycool	P4 / TT3
6	-	n/a	Eazycool	P5 / TT4
7	-	Not used	Eazycool	P7
8	-	Current measurement 1	Eazycool	Current sensing 1
9	-	Current measurement 2	Eazycool	Current sensing 2
10	-	Voltage L1	Eazycool	Voltage sensing 1
11	-	Voltage L2	Eazycool	Voltage sensing 2
12	-	Voltage L3	Eazycool	Voltage sensing 3
13	EP_Comp	Electrical power input compressor	From voltage and current	-
14	-	Electrical energy compressor	From voltage and current	-
15	1W_01	Suction	1-wire sensor	-
16	1W_02	Liquid line	1-wire sensor	-
17	1W_03	Indoor/cold room sensor	1-wire sensor	-
18	-	Not used		-

9 External connections

The chapter describes the connections to the ClimaCheck Concom. For a full description please refer to the supplier manual RTCU-DX4i pro.

Connections to external equipment are done via pluggable screw terminals that are located on the top and bottom sides of the unit. All connections are available externally for easy access and maintenance.

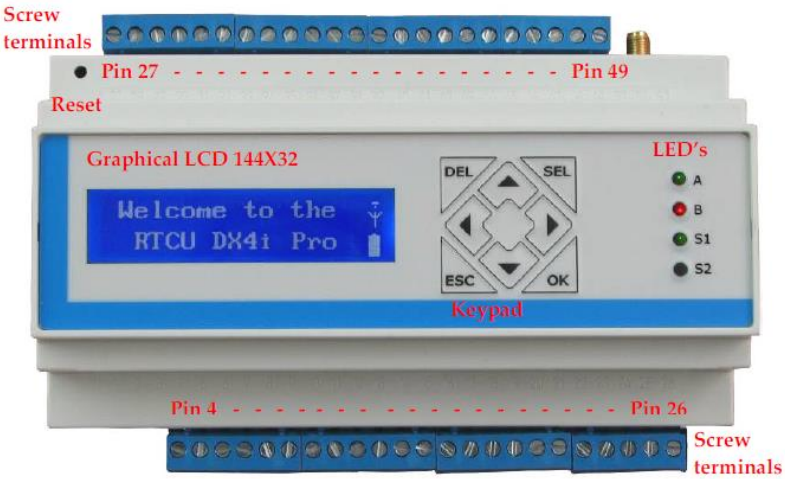

Figure 6 Front view

Below is a list of the pin numbers and descriptions. The standard pins are highlighted in yellow while the optional analog inputs are highlighted in blue.

Pin	Name	Description
4	CAN-H	CAN-bus H-signal
5	CAN-L	CAN-bus L-signal
6	SGND	Signal ground
7	1Wire	1-Wire bus for accessories such as ID-Button / temperature sensors
8	1Wire-LED	1-Wire ID-Button LED
9	SGND	Signal ground
10	RS485_1+	RS485 non-inverting signal for RS485 port 1
11	RS485_1-	RS485 inverting signal for RS485 port 1
12	SGND	Signal ground
13	RS485_2+	RS485 non-inverting signal for RS485 port 2
14	RS485_2-	RS485 inverting signal for RS485 port 2
15	SGND	Signal ground
16	Voice	External voice
17	AIN1	Analog input 1
18	AIN2	Analog input 2
19	AIN3	Analog input 3
20	AIN4	Analog input 4
21	AGND	Analog ground
22	AOUT1	Analog output 1
23	AOUT2	Analog output 2
24	AOUT3	Analog output 3
25	AOUT4	Analog output 4
26	AGND	Analog ground
27	PGND	Power ground, negative (-) connection
28	SUPP	Power supply, positive (+) connection
29	SUPP	Power supply, positive (+) connection
30	DOUT1	Digital output 1
31	DOUT2	Digital output 2
32	DOUT3	Digital output 3
33	DOUT4	Digital output 4
34	DOUT5	Digital output 5

35	DOUT6	Digital output 6
36	DOUT7	Digital output 7
37	DOUT8	Digital output 8
38	SGND	Signal ground
39	SGND	Signal ground
40	DIN1 / S0IN1	Digital input 1 / S0 input 1
41	DIN2 / S0IN2	Digital input 2 / S0 input 2
42	DIN3 / S0IN3	Digital input 3 / S0 input 3
43	DIN4 / S0IN4	Digital input 4 / S0 input 4
44	DIN5	Digital input 5 / Wakeup (ignition) input
45	DIN6	Digital input 6
46	DIN7	Digital input 7
47	DIN8	Digital input 8
48	SGND	Signal ground
49	SGND	Signal ground

The bottom side of the ClimaCheck Concom has all the communication interfaces: CAN, 1-Wire, RS232 Port 1, RS232 Port 2, RS485 Port 1, RS485 Port 2 and external voice output. The analog inputs/outputs are also found on this side.

The SIM card reader with lock mechanism is also located on the bottom side.

Figure 7 Bottom-side view

On the top side of the ClimaCheck Concom, the following interfaces are found: power, digital inputs, digital outputs and an SMA female connector for an external GSM antenna. The SD-CARD reader and three DIP switches are also found on this side. Finally the mini USB-B connector used as programming/service interface is located on the top side.

Figure 8 Top-side view

10 Electrical drawing